User: kuroka_m,Date: 27/11/2020,Qty: 0

Rev.No.: 1	Alteration:Change shape	Date: 25/11/20	Name:kuroka_m

MODEL IN SCALE 1:1

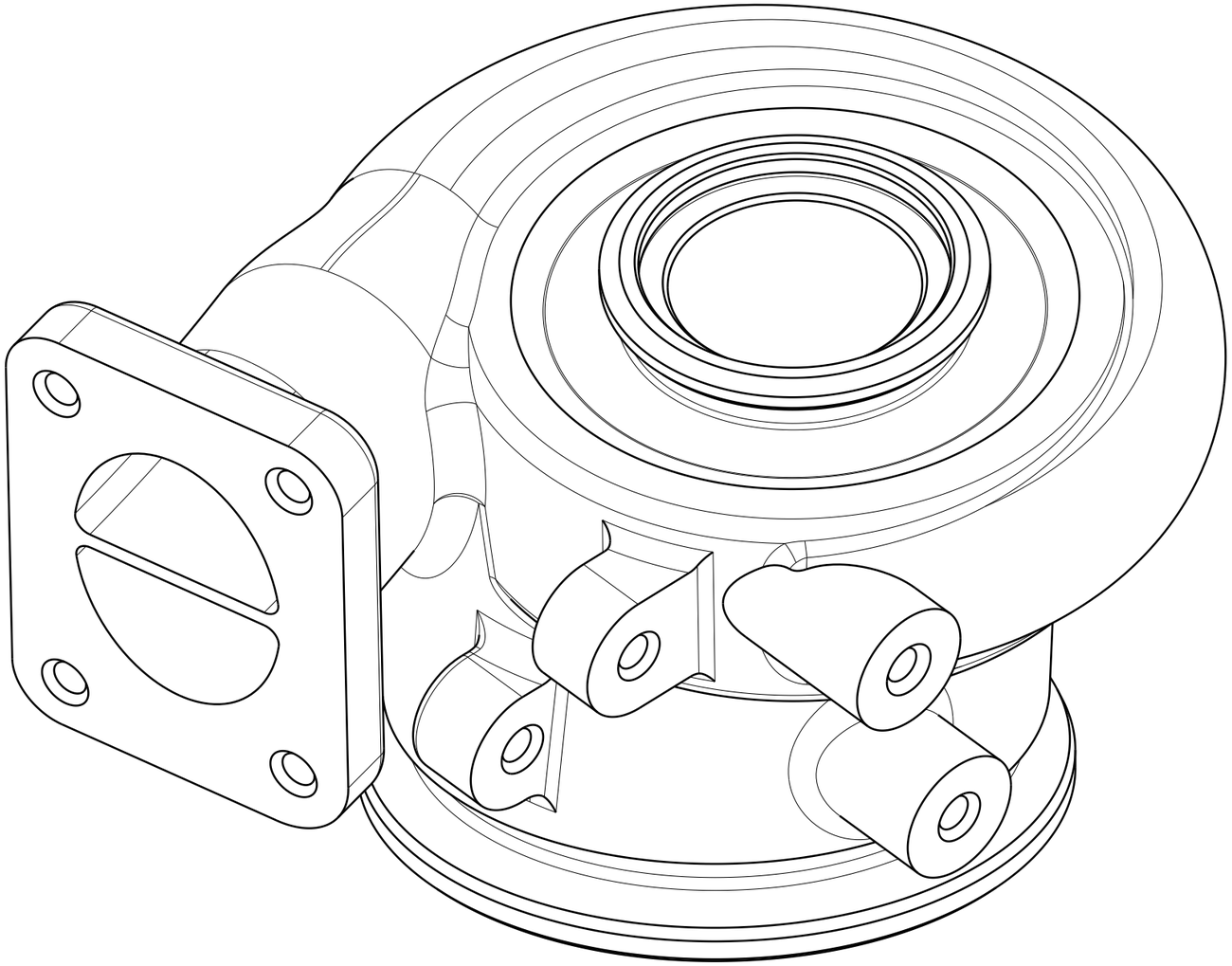

Machine : M/C, NC Lathe, M/C 5Axis

WORK : Turbine housing

WORKPIECE MATERIAL - Cast stainless steel

Unspecified Tolerances	Draw		Customer: TUNGALOY Japan	Tungaloy
Dim.s: -.-	Design		Designation: LAYOUT-TURBO HOUSING	Dwg.No. 32447539-HCL
Angles: -.-	Check			
	Appr.		Process Layout.	Page 1 Of 1 / Rev. No. 1
	Scale		Lead Drawing	
	© 2019 Tungaloy Corporation - Copyrights Notice		-.-	Reg.No. 61138/1 A3L
			FL-40029766	

User: kuroka_m,Date: 27/11/2020,Qty: 0

MODEL IN SCALE 1:2 TOOLS IN SCALE 2:3

Rev.No.: 1	Alteration:Add a tool	Date: 25/11/20	Name:kuroka_m

DoForceTri

CUT 101/102
Face Milling Rough/Finish
TPTN12J125B38.1R08
TNMU120708PER-MJ AH3135

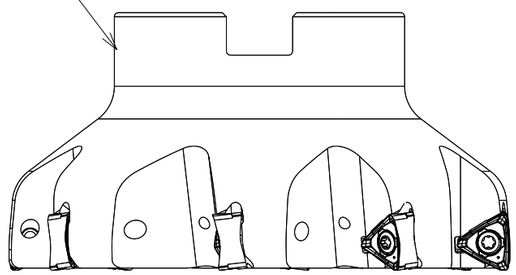

DoTripleMill

CUT 101
Face Milling Rough
TASN13J125B38.1R10
SNMU1307ANEN-MJ AH3135

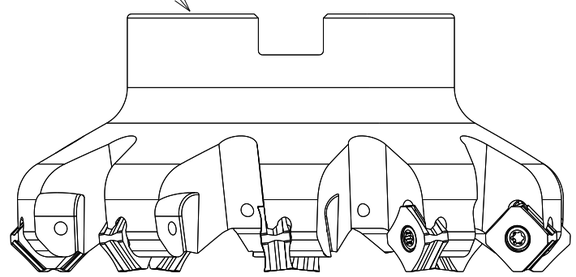

DoTripleMill

CUT 102
Face Milling Finish
TASN13J125B38.1R10
ONMU0507ANEN-MJ AH3135

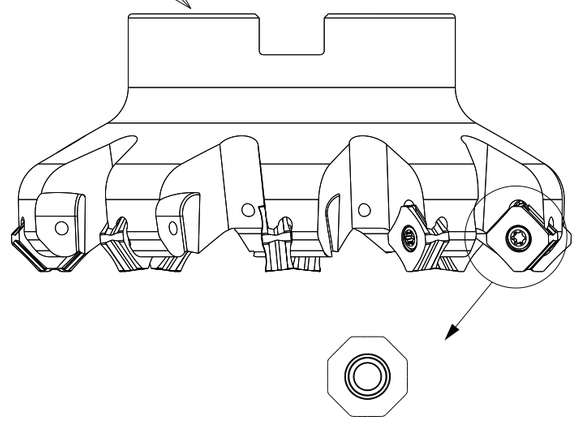

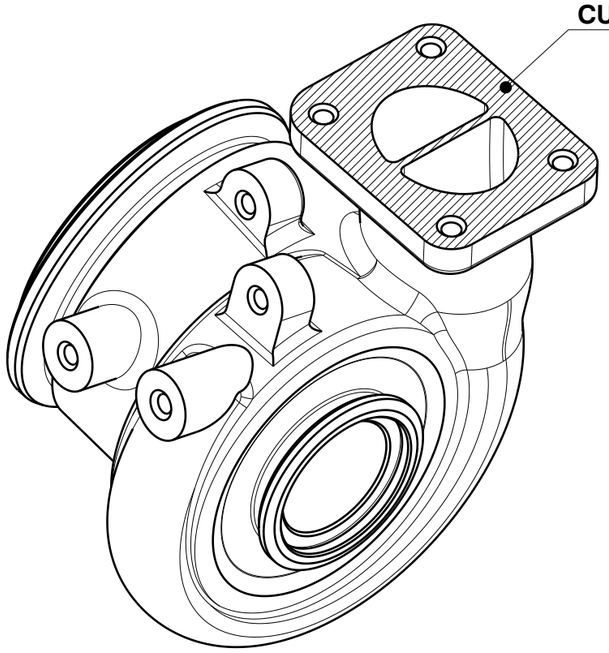

DoQuadMill

CUT 101/102
Face Milling Rough/Finish
THSN12J080B25.4R05
SNMU120608HNEN-MM AH3135

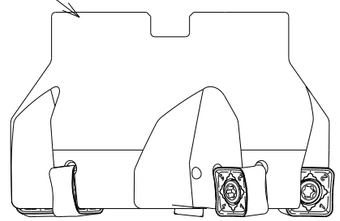

M/C : Face Milling

Unspecified Tolerances	Draw		Customer: TUNGALOY Japan	Tungaloy
Dim.s: -.-	Design		Designation: LAYOUT OP100-TURBO HOUSING	Dwg.No. 32447539-HC
Angles: -.-	Check		Process Layout.	Page 1 Of 1
	Appr.		Concept	Rev. No. 1
	Scale		-.-	Reg.No. 61138/1
	© 2019 Tungaloy Corporation - Copyrights Notice		FL-40029766	A3L

User: kuroka_m,Date: 27/11/2020,Qty: 0

Rev.No.: 1	Alteration:Update the drawing	Date: 27/11/20	Name:kuroka_m

MODEL IN SCALE 1:2 TOOLS IN SCALE 1:1

CUT 201/202/203
Face Milling Finish
SM16-L230-C32
HPA10R032MM16-03
TOMT100408PDER-MJ AH3135

CUT 201/202/203
Face Milling Finish
SM16-L230-C32
HPA06R032MM16-05
TOMT060308PDER-MJ AH3135

CUT 201/202/203
Face Milling Finish
EPAV06M032C32.0R06L
AVGT060308PBER-MJ AH3135

CUT 204
Face and Back face Milling Finish
ASW06R/L100-B16E32 (Special)
WNGU060308TN-MJ AH3135

CUT 205
FaceMilling Rough/Finsh
EPTN12M032C32.0R03
TNMU1207R08PER-MJ AH3135

CUT 205
FaceMilling Finish
EPD05R032M25.0W06
SDMT050204PN-MJ AH725

CUT 206
FaceMilling Finish
EPAV06M012C12.0R03
AVGT060308PBER-MJ AH3135

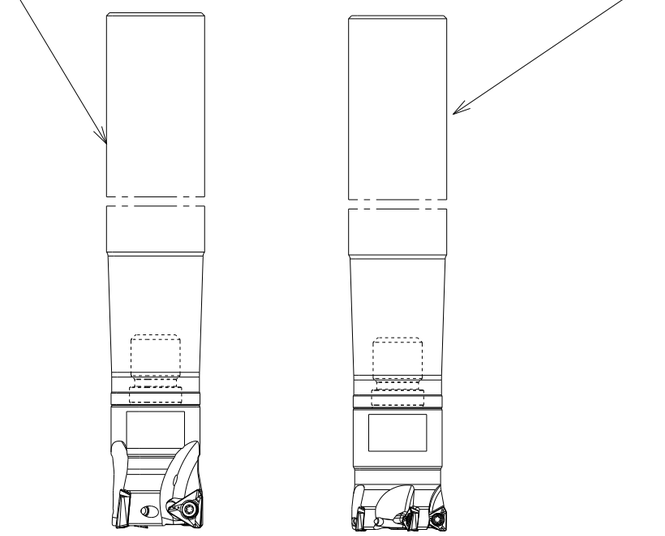

TungTri
TungFrex

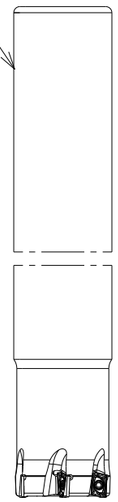

TungForceRec

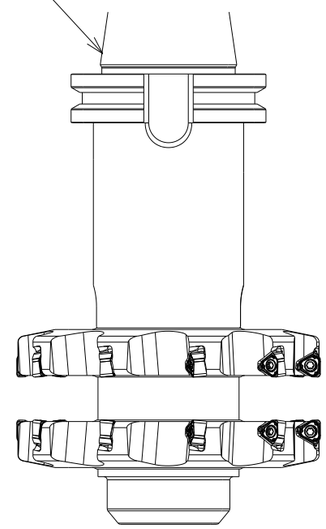

TungUniversalSlot

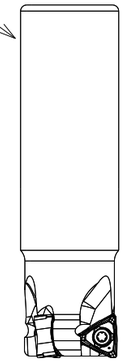

DoForceTri

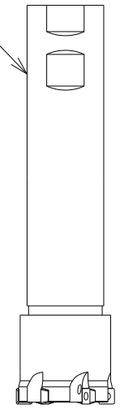

TungQuad

TungForceRec

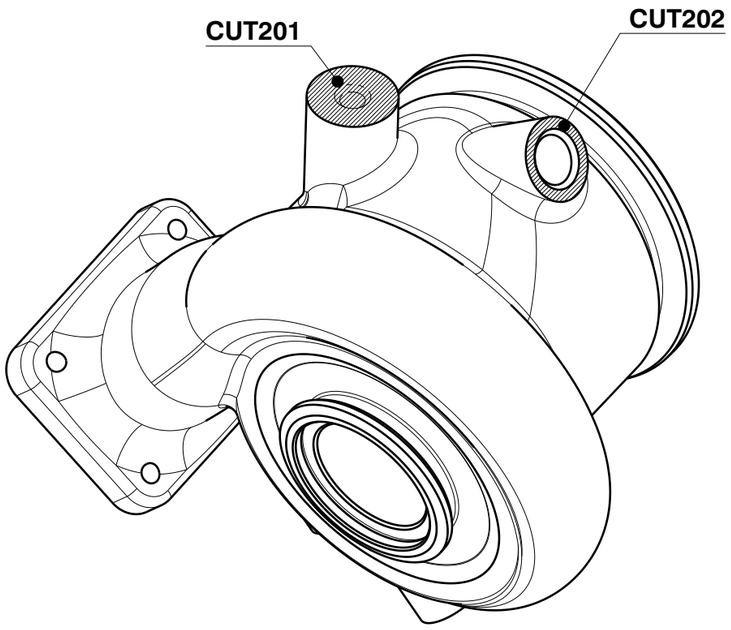

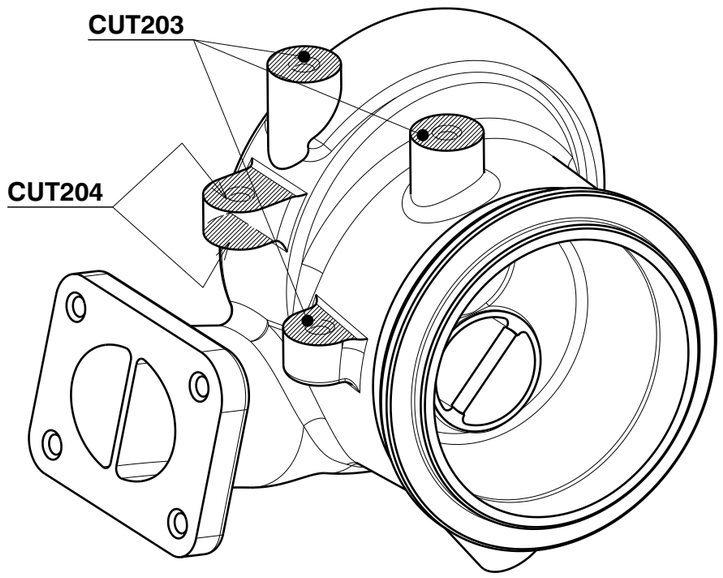

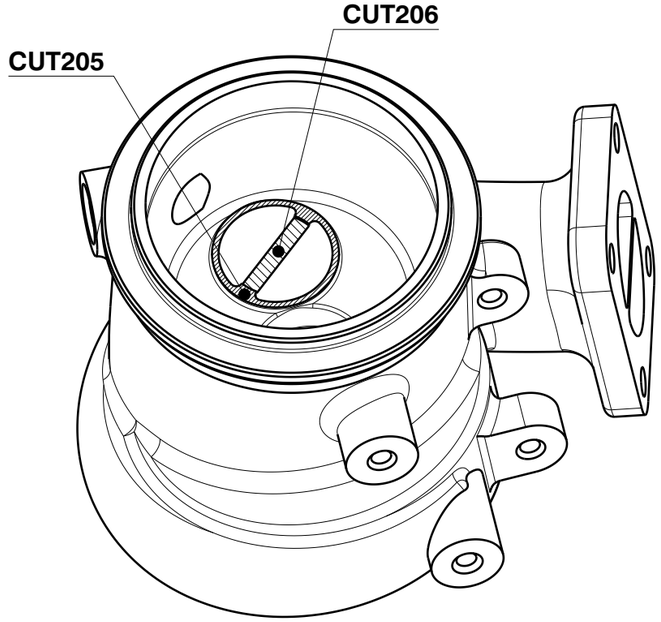

M/C : Rib Milling

Unspecified Tolerances	Draw	Customer: TUNGALOY Japan	Tungaloy
Dim.s: -.-	Design	Designation: LAYOUT OP200-TURBO HOUSING	Dwg.No. 32447539-HC1
Angles: -.-	Check		
	Appr.	Process Layout.	Page 1 Of 1 Rev. No. 1
	Scale	Concept	
	© 2019 Tungaloy Corporation - Copyrights Notice	-.-	Reg.No. 61138/1 A3L
		FL-40029766	

User: kuroka_m,Date: 27/11/2020,Qty: 0

MODEL IN SCALE 1:2 TOOLS IN SCALE 1:1

Rev.No.:	Alteration:	Date:	Name:
1	Update the drawing	27/11/20	kuroka_m

CUT 301/302
Holemaking and chamfering Finish
TID067L16L45S12 (SPECIAL)
DMP067
AOMT060204-C45

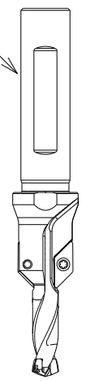

DrillMeister

CUT 302
Chamfering Finish
VSSD10L075S06-S
VCP100L09.0A45-02S06

TungMeister

CUT 303
Int. Thread milling Finish
MTEC0605C141.25ISO

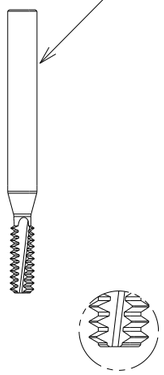

SolidThread

CUT 304
Holemaking Finish
TDX160F20-2
XPMT050204R-DJ AH6030

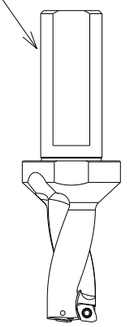

TungDrillTwisted

CUT 304
Holemaking Finish
TID160F20-1.5
DMP165

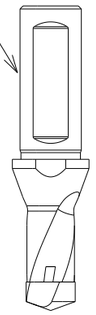

DrillMeister

CUT 305
Chamfer milling Finish
EASD05M016C16.0R04
SDMT050204PN-MJ

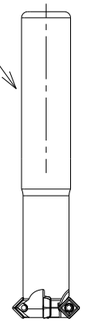

TungQuad

CUT 306
Hole counter milling Finish
TEC100H7-20C10CF-M72

SolidMeister
VariableMeister

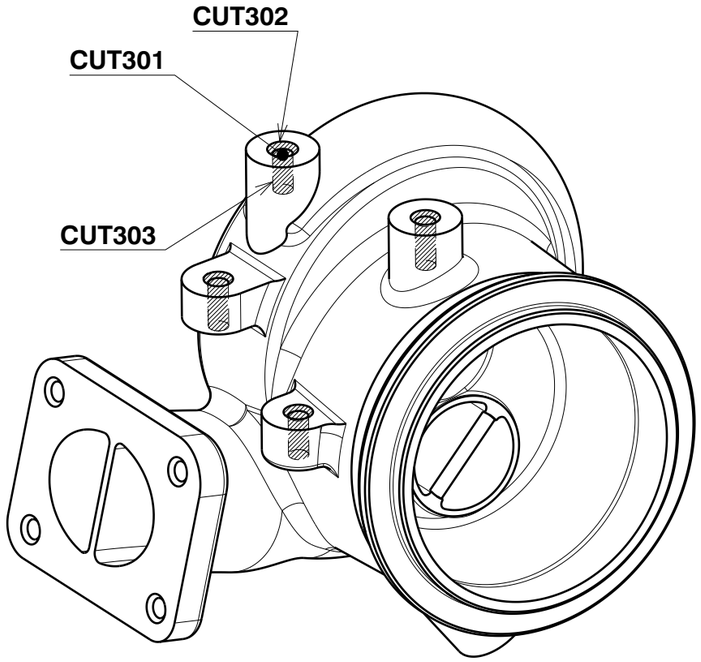

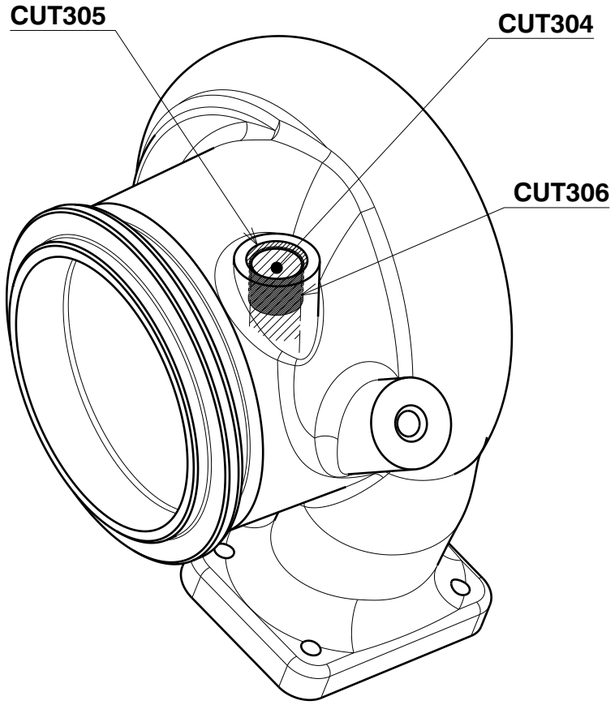

CUT 304/305
Holemaking and chamfering Finish
TID165L22L72S20 (SPECIAL)
DMP165
AOMT060204-C45

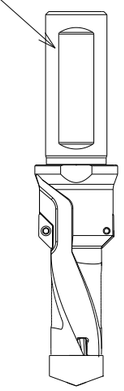

DrillMeister

M/C : Holemaking

Unspecified Tolerances	Draw	Customer: TUNGALOY	Japan
Dim.s: -.-	Design	Designation: LAYOUT OP300-TURBO HOUSING	Dwg.No. 32447539-HC2
	Check		
Angles: -.-	Appr.	Process	Layout.
	Scale	Concept	Page 1 Of 1 / Rev. No. 1
		-.-	Reg.No. 61138/1
		FL-40029766	A3L

© 2019 Tungaloy Corporation - Copyrights Notice

User: kuroka_m,Date: 27/11/2020,Qty: 0

MODEL IN SCALE 1:2 TOOLS IN SCALE 2:3

Rev.No.:	Alteration:	Date:	Name:
1	Update the drawing	27/11/20	kuroka_m

CUT 401
OD Turning Rough
ADJNL2525X-15-CHP-MC
DNMG150412-HRM AH8015

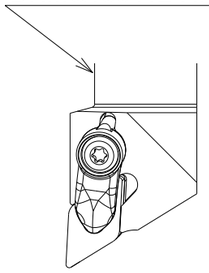

TungTurn-Jet
AH8000

CUT 402
OD Turning Rough/Finish
CTEL2525-6T20
DTR6-300 AH7025

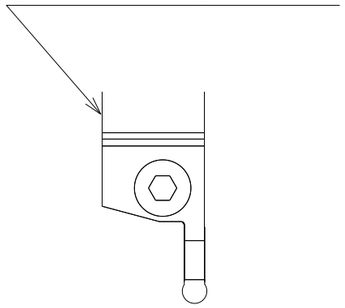

TungCut

CUT 403
OD Turning Rough/Finish
JCG-3.2L2525F24L150 (SPECIAL)
DGN320-L16R05A35 AH7025 (SPECIAL)

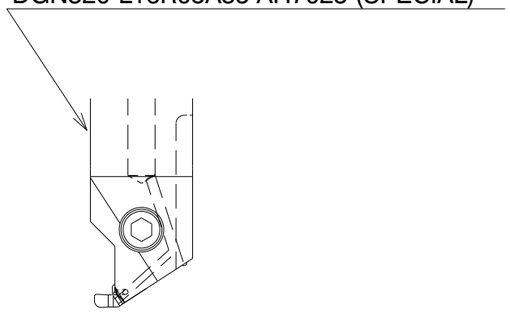

TungCut
TungTurn-Jet

CUT 404
ID Turning Rough
A32S-AWLNL08-D400
WNMG080412-HRM AH8015

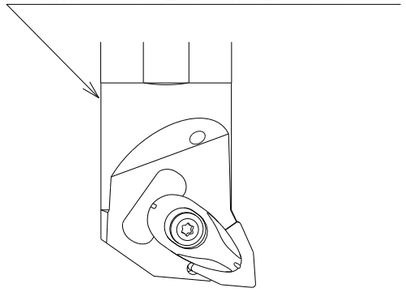

Turning A
AH8000

CUT 405
ID Turning Rough/Finish
CTIL32-4T10-D400
DTI400-080 AH7025

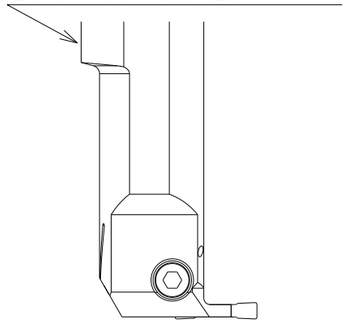

TungCut

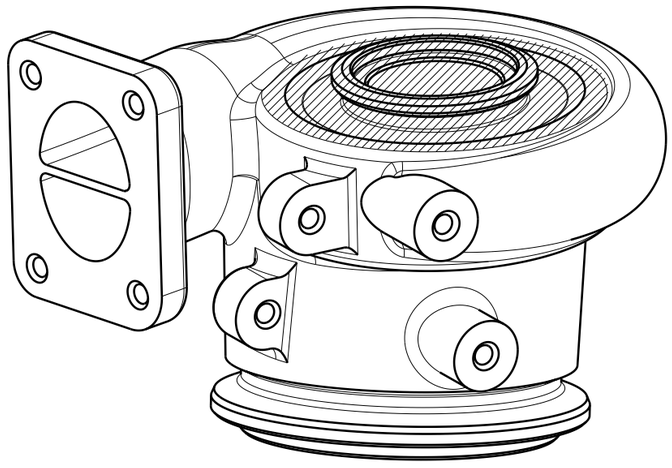

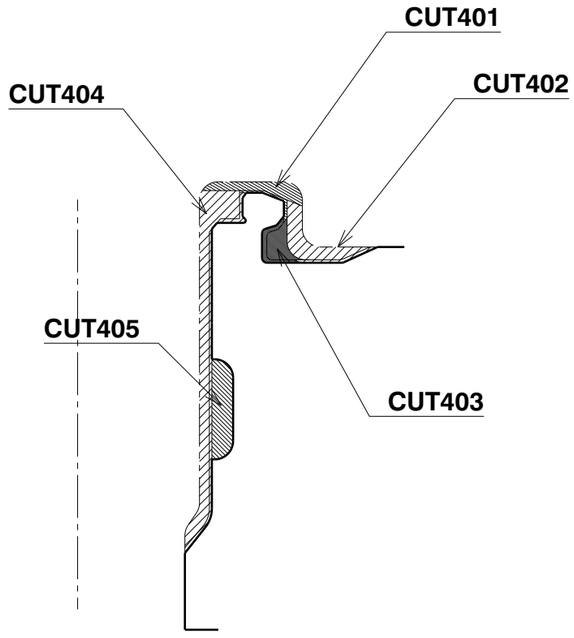

Lathe : OD/I.D. Turning

Unspecified Tolerances	Draw		Customer: TUNGALOY Japan	Tungaloy
Dim.s: -.-	Design		Designation: LAYOUT OP400-TURBO HOUSING	Dwg.No. 32447539-HC3
Angles: -.-	Check		Process Layout.	Page 1 Of 1
	Appr.		Concept	Rev. No. 1
	Scale		-.-	Reg.No. 61138/1
			FL-40029766	A3L

© 2019 Tungaloy Corporation - Copyrights Notice

MODEL IN SCALE 1:2 TOOLS IN SCALE 2:3

Rev.No.:	Alteration:	Date:	Name:
1	Update the drawing	26/11/20	kuroka_m

CUT 501/502
O.D. Face turning Rough/Finsh
AWLNL2525X-08-CHP-MC
WNMG080408-HRM AH8015

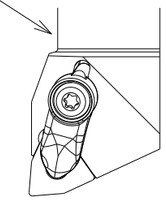

TurningA
TungTurn-Jet
AH8000

CUT 501/502
O.D. Face turning Rough/Finsh
PCLNL2525M12-CHP
CNMG120404-HRF AH8015

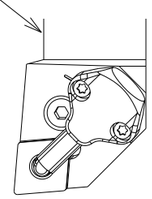

TungTurn-Jet
AH8000

CUT 501/502
O.D. Face turning Rough/Finsh
PCLNL2525M12-CHP
CNMG090404E-TSF AH8015

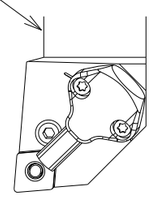

TungTurn-Jet
ISO-EcoTurn
AH8000

TurningA
AH8000

CUT 503
O.D. Turning Rough
ADPNN2525M15-A
DNMG150412-HRM AH8015

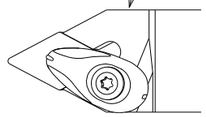

TurningA
AH8000

CUT 504
O.D. Turning Finish
AVVNN2525M16-A
VNMG160408-HRM AH8005

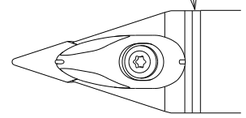

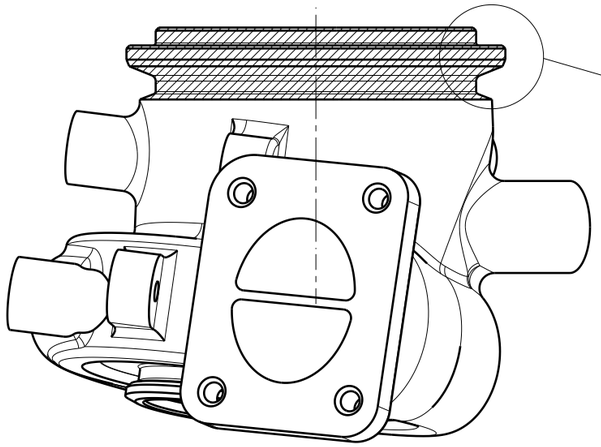

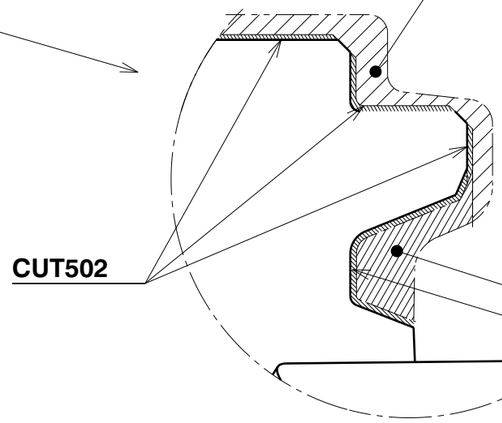

TungCut
TungTurn-Jet
TungModularSysytem

CUT 504/505
O.D. Turning Rough/Finish
CHSR2525-CHP
CAER-4T20-CHP
DTM4-040 AH7025

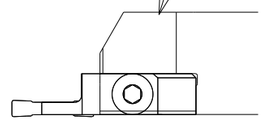

Lathe : O.D. Turning

Unspecified Tolerances	Draw		Customer: TUNGALOY Japan	Tungaloy
Dim.s: -.-	Design		Designation: LAYOUT OP500-TURBO HOUSING	Dwg.No. 32447539-HC4
Angles: -.-	Check		Process Layout.	Page 1 Of 1
	Appr.		Concept	Rev. No. 1
	Scale -		-.-	Reg.No. 61138/1
			FL-40029766	A3L

© 2019 Tungaloy Corporation - Copyrights Notice